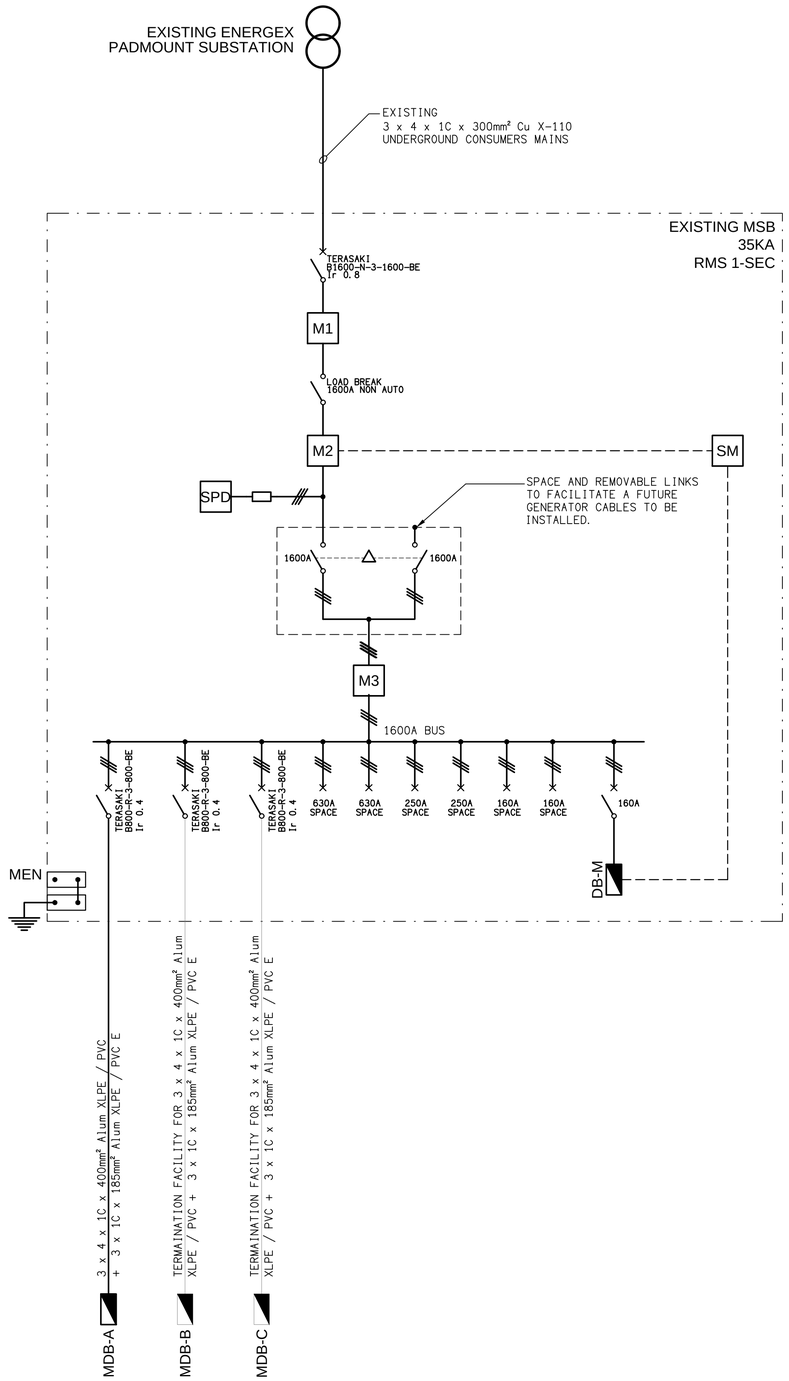


## SCHEMATIC

MAIN SWITCHBOARD CONFIGURATION

NOT TO SCALE

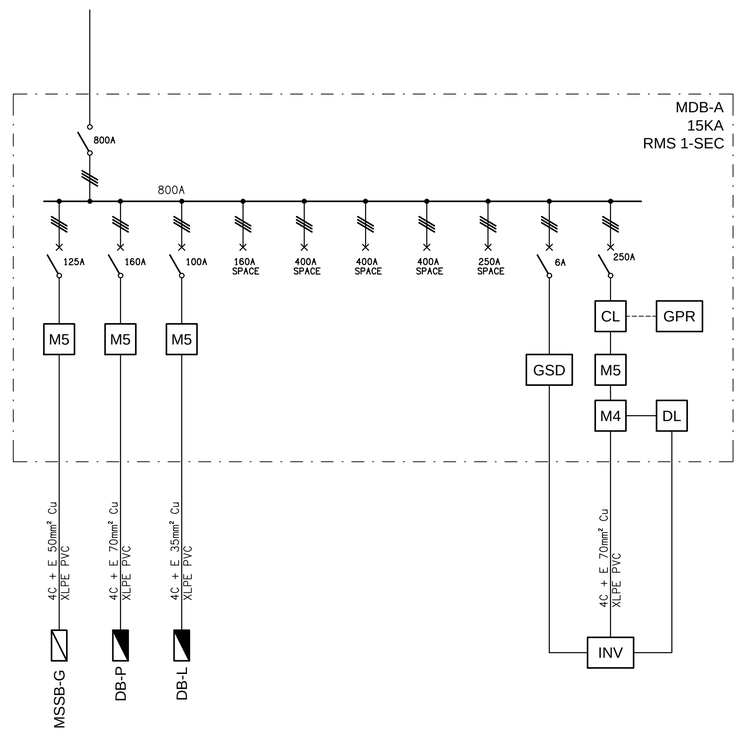


## SCHEMATIC

MDB-A CONFIGURATION

NOT TO SCALE

| REV: | DESCRIPTION: | DATE: |
|---|---|---|
| C | TENDER | 26/10/2026 |

ELECTRICAL DESIGN GROUP BRISBANE
PTY LTD
ACN 092 710 793

TRADING AS:
ELECTRICAL DESIGN GROUP

THE COPYRIGHT OF THIS DRAWING
REMAINS THE PROPERTY OF THE
ELECTRICAL DESIGN GROUP.

USE FIGURED DIMENSIONS
IN PREFERENCE TO SCALE.

ALL DIMENSIONS TO BE
VERIFIED ONSITE.

**ELECTRICAL DESIGN GROUP**
ELECTRICAL BUILDING SERVICES CONSULTANTS
BRISBANE GOLD COAST
P.O.Box 15, Sherwood Q.4075
Phone: (07) 3278 4375
Email: brisbane@edg.net.au
Web: www.edg.net.au

PROJECT:
KINGS CHRISTIAN COLLEGE WALLOON
PRIMARY WAL01

KARRABIN ROSEWOOD ROAD, WALLOON

DRAWING:
**ELECTRICAL SERVICES**
POWER SCHEMATICS

SCALE: NOT TO SCALE AT A1

| PROJECT NO: | DRAWING NO: | REVISION: |
|---|---|---|
| C3826a | E03 | C |